DE series servo driver instruction manual

Shenzhen ONKE Technology Co., LTD

DE Series servo driver model description

DE PC -090 75 -OP EA MD

A series of
DE/DE2

Input order
P:pulse A:analog
C:CANopen E:EtherCAT

power supply voltage
090:18V-90VDC 180:18V-180VDC
135:18V-135VDC

Rated current
75:75Amps(52Arms) 100:50Amps(70Arms)
150:150Amps(105Arms)

Special function
OP:Pulse output

feedback
E:Incremental A/B orthogonal encoder
A:Absolute encoder
S:Analog quantity sine and cosine encoder

special requirements
MD:small-sized LG:large-sized
RTR:Reduce temperature rise

Attention to:
1.The driver supply voltage must be greater than or equal to the rated voltage of the motor

2.The rated current of the driver must be greater than or equal to the rated current of the motor

DE Series driver specifications summary table

Driver model	Service voltage	Rated current Amps(Arms)	Peak current Amps(Arms)6S	Feedback type	Overall dimensions	Weight
DEPC-09003-OPEA	18～90 VDC	3A（2.1A）	6A（4.2A）	Incremental I Absolute value	167*100*35mm	0.45kg
DEPC-09005-OPEA		5A（3.5A）	10A（7A）			
DEPC-09016-OPEA		16A（11A）	48A（33A）			
DEPC-09024-OPEA		24A（16A）	50A（35A）			
DEPC-09040-OPEA		40A（28A）	80A（28A）			
DEPC-09050-OPEA		50A（35A）	100A（70A）			
DEPC-09075-OPEA		75A（52A）	150A（105A）		200*114*59mm	1.10kg
DEPC-090100-OPEA		100A（70A）	200A（140A）			
DEPC-090150-OPEA		150A（105A）	250A（175A）		221*140*59mm	1.45kg
DEPC-090200-OPEA		200A（140A）	300A（210A）		221*140*85mm	1.8kg
DEPC-090300-OPEA-MD		300A（210A）	420A（294A）			
DEPC-090300-OPEA-LG		300A（210A）	420A（294A）		265*140*85mm	2.2kg
DEPC-18024-OPEA	18～135 /180VDC	24A（16A）	50A（35A）		167*100*35mm	0.45kg
DEPC-18050-OPEA		50A（35A）	100A（70A）		200*114*59mm	1.10kg
DEPC-18075-OPEA		75A（52A）	150A（105A）			
DEPC-180100-OPEA		100A（70A）	200A（140A）		221*140*59mm	1.45kg
DEPC-180150-OPEA		150A（105A）	250A（175A）		265*140*85mm	2.2kg
DEPC-135100-OPEA		100A（70A）	200A（140A）		221*140*59mm	1.45kg
DEPC-135200-OPEA		200（140A）	300A（210A）		221*140*85mm	1.8kg

DE Serial terminal Definition

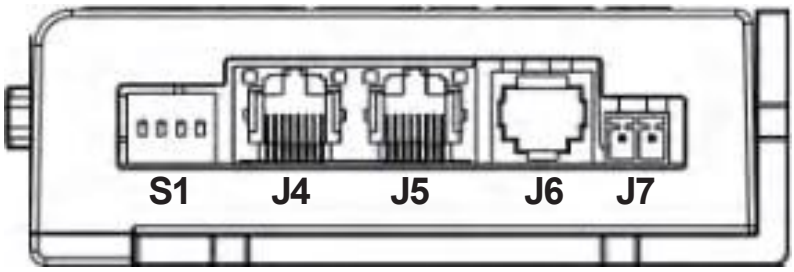

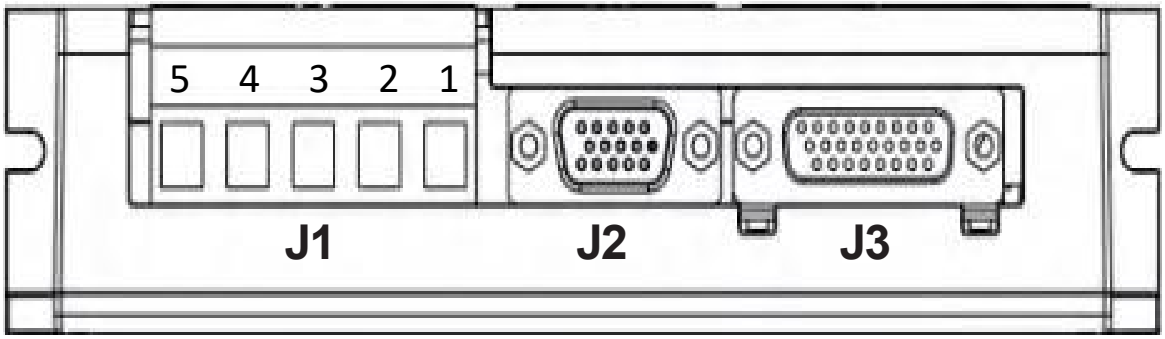

DE Series outline dimension drawing

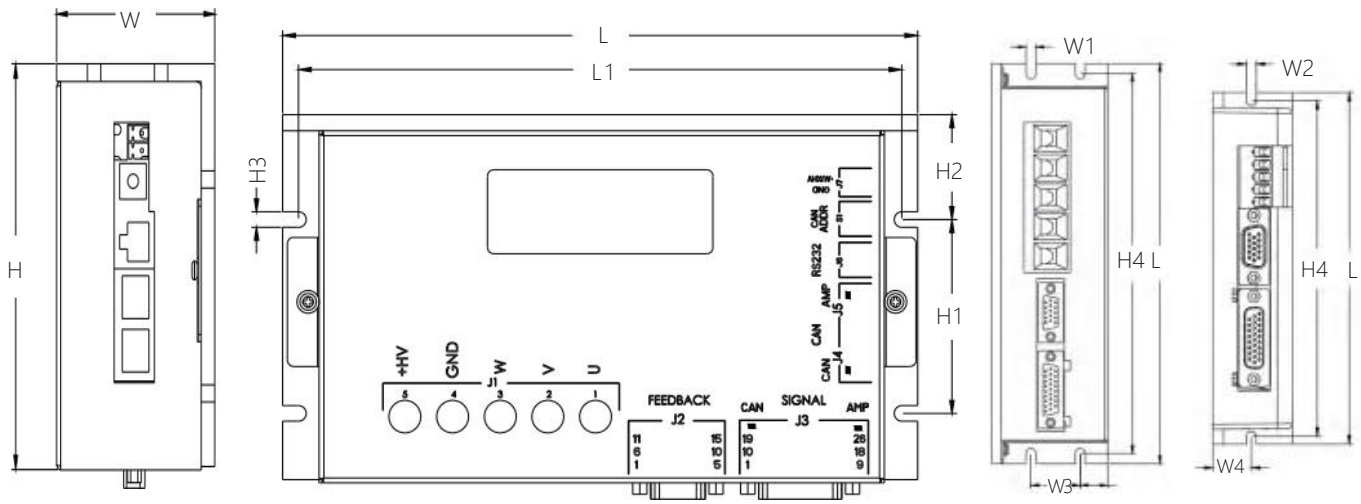

model	L	L1	W	W1	W2	W3	W4	H	H1	H2	H3	H4
DE-3A~50A	167	160	35	/	2-4.5	/	19.5	100	51	22	4-4.5	160
DE-75A	200	190	59	4-5.0	/	25	/	114	60	32.5	4-4.8	190
DE-100A	200	190	59	4-5.0	/	25	/	114	60	32.5	4-4.8	190
DE-150A	221	211	59	5	/	25	/	140	60	45	4.8	211
DE-200A	221	211	85	5	/	25	/	140	/	/	/	211
DE-300A	221	211	85	5	/	25	/	140	/	/	/	211
DE-350A	265	255	85	5	/	25	/	140	/	/	/	255

1、Product introduction：

1.1 An overview of the

DE series programmable intelligent servo drive is a general purpose, high performance, DC power supply, compact structure of all digital servo drive controller. It is mainly used for position, speed and torque control of linear (DDL), torque (DDR), voice coil, brushless and brushless servo motor. It can operate in three modes, namely, stand-alone, external or distributed network control. It supports incremental encoders, Resolver, digital Hall feedback and absolute encoders. The multimode encoder port is used as input or output depending on the basic setup of the drive. Feedback from the secondary encoder as input to create a double-loop position control system

1.2 Technical characteristics

◆•Control mode: position, speed, torque；

◆•Sampling frequency (time) Current loop: 16KHz(62.5us); Speed/Position Loop :4KHz(250μs)

◆•Bandwidth: the current loop is generally 2.5kHz, which varies with parameter adjustment and load inductance；

◆•Programmable protection: position error, over current, over voltage or under voltage, I^2t, output short circuit overload and other multi-directional protection functions；

◆•Type of driving motor: brushless motor, brush motor, linear motor, voice coil motor, etc.；

◆•Encoder feedback: incremental encoder, Hall, grating ruler, rotary transformer (plus conversion card); Absolute encoder, support SSI, Absolute A, BiSS(B&C) protocol;

◆•Pulse response frequency up to 2MHz, with digital filtering function；

◆•RS232 serial interface, baud rate up to 115KB；

◆•CAN2.0 local area bus, compatible with CANopen DS-402, baud rate up to 1MHz; Support PVT, back to zero, interpolation；

◆•EtherCAT Ethernet Fieldbus, used as EtherCAT slave using CANopen application protocol, supports cyclic synchronous position-speed-Torque (CSP-CSV-CST),PVT, interpolation, and zero back for DSP-402 motion control devices with EtherCAT(CoE) protocol；

◆•Power supply voltage: 20-90(135/180)VDC；

1.3 Standard specifications for servo drives

Position control	Command control mode			Pulse, ±10V analog input, CANopen (EtherCAT), function generator, track index, software programming
	input signal	Pulse instruction	Input pulse pattern	The command can be direction + pulse, ORTHOGONAL pulse of A and B phases, and CW/CCW pulse.
			Signal format	Collector open circuit
			Maximum pulse frequency	biggest 2 MPPS
		Simulation instruction	Voltage range	Input voltage range ±10V (12-bit resolution)
			input impedance	Differential input impedance =5KΩ
Speed control	Command control mode			PWM, ±10V analog, function generator, software programming
	input signal	PWM	polarity	PWM=0 ~ 100%, polarity =1/0
			nonpolar	PWM=50% +/-50%,
			Frequency range	Minimum 1 kHz, maximum 100 kHz
			Minimum pulse width	220ns
		Simulation instruction	Voltage range	Input voltage range ±10V (12-bit resolution)
			input impedance	Differential input impedance =5KΩ
Current control	Command control mode			PWM, ±10V analog, function generator, software programming
	input signal	PWM	polarity	PWM=0 ~ 100%, polarity =1/0
			nonpolar	PWM=50% +/-50%,
			Frequency range	Minimum 1 kHz, maximum 100 kHz
			Minimum pulse width	220ns
		Simulation instruction	Voltage range	Input voltage range ±10V (12-bit resolution)
			input impedance	Differential input impedance =5KΩ
I/O signal	Digital input IN		port number	10 (IN3, IN4, IN5 and IN6 are high-speed ports)
			Signal format	NPN, PNP
			Settable function	Servo enable, external reset, positive/reverse limit, motor stop, high speed analog acquisition control, PWM synchronous signal input, high speed pulse input, etc.
	Digital output OUT		port number	three
			Signal format	NPN output
			Settable function	Fault signal, brake control, PWM sync signal, custom event, track state, position trigger, program control.
function	LED indicator			State indicator, CAN (EtherCAT) network indicator
	Communications functions	RS-232	Baud rate	9600-115200
			agreement	Full duplex mode, ASCII or binary format
		CAN	Baud rate	20kbit/s-1Mbit/s
			agreement	Canopen application layer DS-301 V4.02
			equipment	Dsp-402 device driver and motion control
		EtherCAT	agreement	CoE, CiA-402
	Protection function			Overvoltage, overcurrent, undervoltage, overload, overheating, abnormalencoder, position tracking error is too large and so on
Using environment	installation location			Non-corrosive gas, flammable gas, etc
	altitude			Below 1000 m
	temperature			-20°C~+50°C
	humidity			5%~95%RH, no condensation of water droplets
	Resistance to vibration/impact			Less than 4.9m/s2 / less than 19.6m/s2

2、Definition of wiring port

2.1 Power input terminal J1

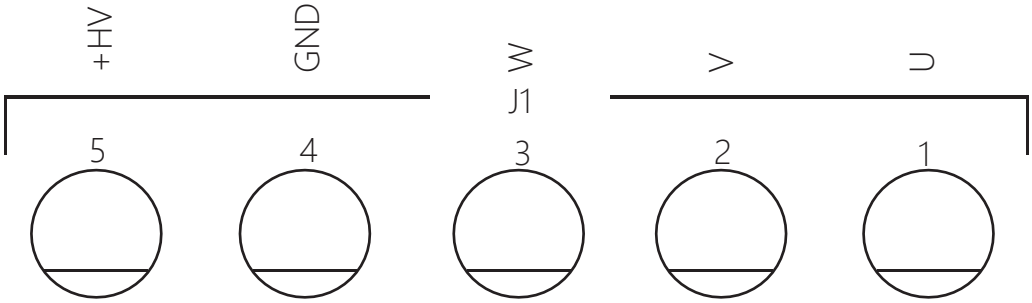

Figure 2.1 Ohm gauge terminal receptacle

Serial number	Define	Terminal	Wiring instructions
1	U	Motor power line U phase	Must be connected to the motor one by one according to the label
2	V	Motor power line V phase	
3	W	Motor power line W phase	
4	GND	Input power -	+20~90V DC
5	+HV	Input power +	

2.2 Motor encoder input terminal J2

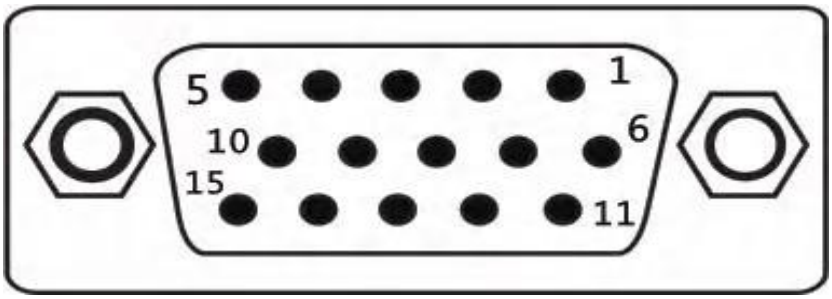

Figure 2.2 three rows of DB15 female seats

J2 axis encoder definition

Pin	Define	Function	Pin	Define	Function
1			9	W+	Motor encoder W+ input
2			10		
3	U+	Motor encoder U+ input	11	B-(DAT-)	Motor encoder B- input (Absolute value coder DAT-)
4	+5V	Motor signal line +5V	12	B+(DAT+)	Motor encoder B+ input (Absolute encoder DAT+)
5	0V	Motor signal cable GND	13	A-	Motor encoder A- input
6	V+	Motor encoder V+ input	14	A+	Motor encoder A+ input
7	Z- (CLK-/MA-)	Motor encoder Z- input (Absolute value CLK-/MA-)	15		
8	Z+ (CLK+/MA+)	Motor encoder Z+ input (Absolute value CLK+/MA+)			

2.3 Control signal I/O terminal J3

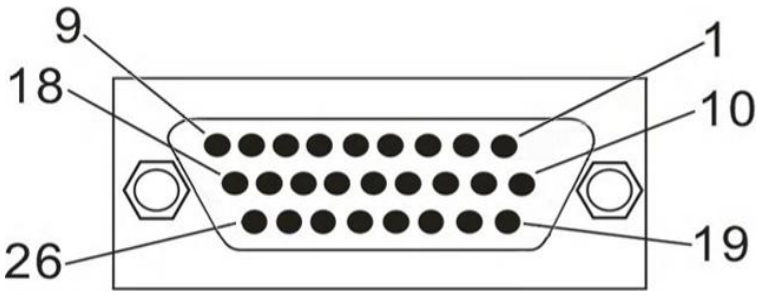

Figure 3.3 Three rows of DB26 female seats

J3 shaft IO

pin	define	function	pin	define	function
1	ISO_COM	Common end of ISO terminal	14	OUT1	custom
2	Ref-	Analog quantity - input	15	OUT2	custom
3	Ref+	Analog quantity + input	16	OUT3	custom
4	IN1	custom	17	MUL_ENC_S-	Second absolute value encoding input
5	IN2	custom	18	MUL_ENC_S+	Second absolute value encoding input
6	IN3	custom	19	GND	Power grounding
7	IN4	custom	20	+5V	5V power output (100mA)
8	IN5	custom	21	EONZ- (CLK-/MA-)	Motor encoder output signal Z- (or Second absolute value encoding input)
9	IN6	custom	22	EONZ+ (CLK+/MA+)	Motor encoder output signal Z+ (or Second absolute value encoding input)
10	ISO_IN7	custom	23	EONB-	Motor encoder output signal B-
11	ISO_IN8	custom	24	EONB+	Motor encoder output signal B+
12	ISO_IN9	custom	25	EONA-	Motor encoder output signal A-
13	ISO_IN10	custom	26	EONA+	Motor encoder output signal A+

Note: Orders requiring a second encoder function must specify this requirement (only one incremental encoder and one absolute encoder are permitted).

2.4 CAN (EtherCAT) communication terminal J4&J5

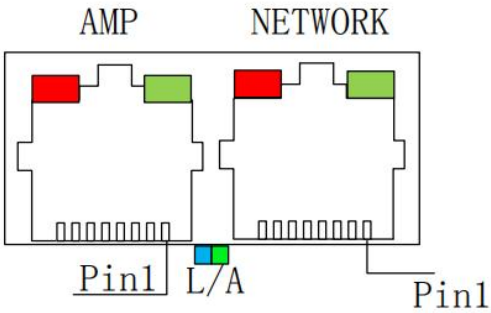

2.4.1 RJ45 pin definition

CAN is defined when communicating

pin	define	function
1	CAN_H	CANH signal
2	CAN_L	CANL signal
3	GND	Communication power ground

EtherCAT communications

When the driver is EtherCAT, the J6 port can accept standard Ethernet cable wiring

2.4.2 Communication indicator (CAN)

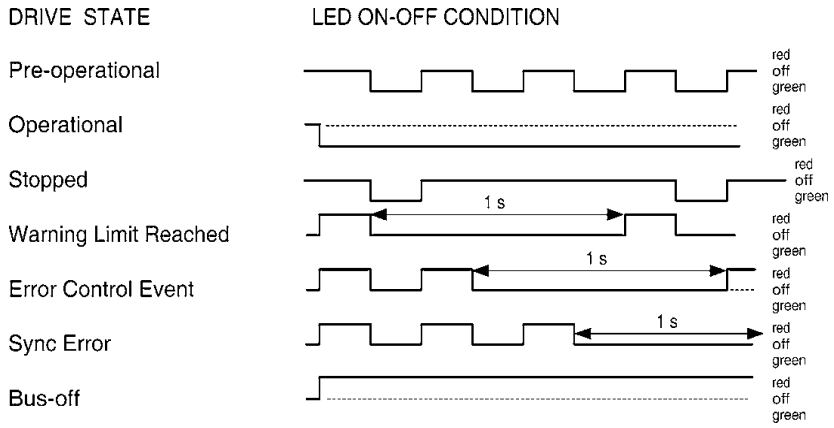

2.4.3 Definition of indicator Status

1. Drive status indicator AMP

Red/green LED light universal color change, whether flashing, to tell us the status of the driver. There are possible cases

Green/no flash	drive is OK and enabled
Green/Slow blinking	drive is OK but not enabled. After enabled, it can run
Green/Flash	Positive limit switch or negative limit switch is effective, the motor will only move in the direction not prohibited by the limit switch
Red/Fixed	Instantaneous failure, after troubleshooting amplifier restart operation
Red/flashing	Lock the fault and restart the amplifier to resume operation

2. Drive NETWORK indicator NETWORK

CAN communication

Indicator light	state
green	Off = Initialization
	Blinking = Before operation
	Blinking once = Stopped
	Steady on = Running
red	Off = There is no error and the communication is normal
	Blinking = Invalid configuration
	One blink = number of warning arrivals
	Blink twice = A protection event or heartbeat event occurs
	Steady on = The CAN controller bus is off
L/A	Off = The communication is normal
	Blinking = The CAN network is faulty

EtherCAT communications

Indicator light	state
green	Off = Initialization
	Blinking = Before operation
	Single blinking = Safe operation
	Steady on = Running
red	Off = There is no error and the communication is normal
	Blinking = Invalid configuration
	One flicker = local error
	Two flashes =PDO or EtherCAT watchdog timed out
	Steady on = An error is displayed
L/A	Off = No connection to the physical layer
	Blinking = Data is being exchanged on the secondary server
	Steady on = connection at the link layer, but no data is being exchanged

2.4.3 SW Driver CAN address DIP switch

When the external DIP switch is selected for software Settings, the dip switch is effective. The switch encoding is in the BCD code sequence, and takes effect when the dip switch is switched to ON.

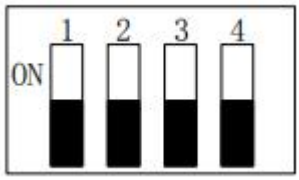

SW Indicates the station number of the DIP switch

SW switch Number	Corresponding stand no
1	1
2	2
3	4
4	8

For example, if you want to set the station number to 3, switch the SW switch 1, 2 to ON and the other switch to OFF, 1+2=3; If you want to set the station number to 12, dial SW 3,4 to ON, other to ooff, 4+8=12

2.5 Serial communication terminal J6

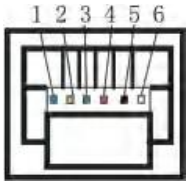

Figure 3.4 RJ11 6 pin crystal head holder

pin	define	function
2	RXD	RS232 communication receiver
3	GND	Communication power ground
5	TXD	RS232 communication sender

debugging connection line is shown below

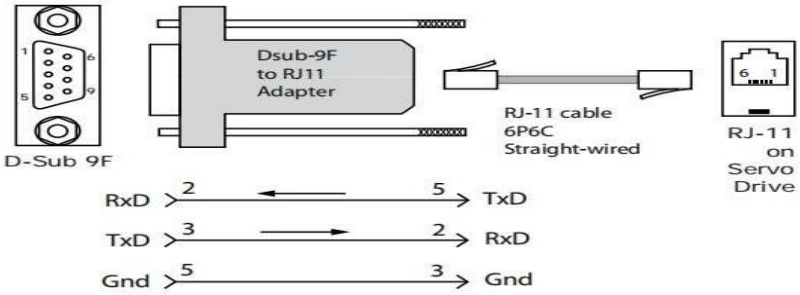

2.6 Auxiliary power supply J7

The driver of J7 socket is the auxiliary power supply interface, if necessary, it can be connected. If connected,+HV is disconnected from power and +AUXHV is powered on, but there is no action when issuing commands

GND	0V
+AUXHV	+24V（or ≤ mains voltage）

3 Hardware Wiring

3.1.1 CAN bus (CANH, CANL, GND)

CAN bus is based on CAN V2.0B physical layer. The signals of CAN physical layer include CANH, CANL and GND, and communicate with CANopen protocol. Electrical interface uses TJA1051 high speed transceiver. The physical address of the drive CAN communication ranges from 0 to 127. The default address is 0. You can reset or restart the drive to take effect by changing the RS-232 communication port address or external switch SW. Through the CAN communication interface, a very effective combination of high data rate and low cost multi-axis motion control system CAN be realized.

CAN network CAN be connected as shown below：

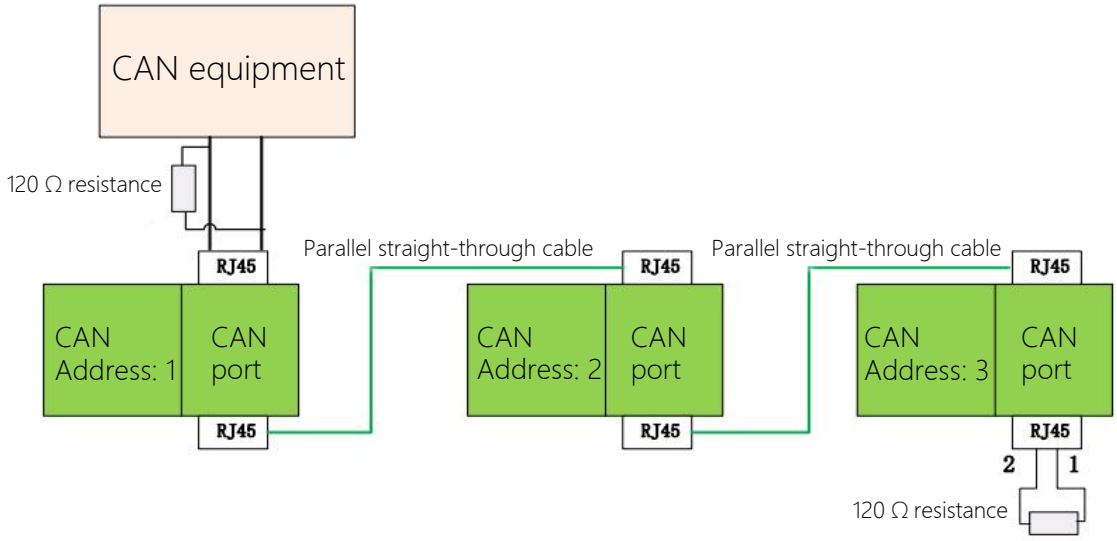

3.1.1 EtherCAT bus

Just connect the drive with a standard Ethernet cable.

3.2 Analog signal input (Ref+,Ref-)

±10Vdc differential analog input, maximum input voltage ±10Vdc, input impedance about 5.36K, resolution 12 bits. The analog signal can be used for torque, speed and position control.

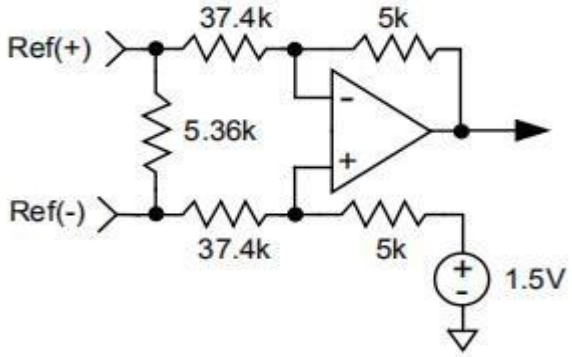

Figure 3.2.1 Analog hardware input circuit

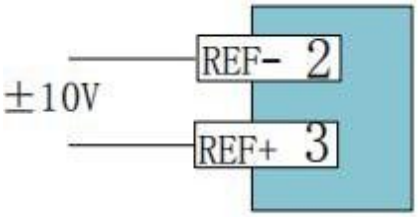

Figure 3.2.2 Analog input wiring of external power supply

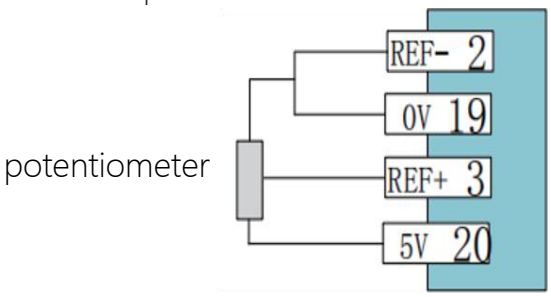

Figure 3.2.3 Analog input wiring of internal power supply

3.3 Digital input signal

DE series servo has 10 digital input ports, with programmable function, the drive power PWM output and safety enable fixed by IN1 control, through this port can realize the power circuit of hardware off (off enable).

According to the port function of the controller and the RC filtering time of the hardware, the input signal port can be divided into general input port and high-speed input port, and the function of each port can be changed by programming.

3.4 General purpose input signal terminal

IN 1, IN 2 Hardware input circuit

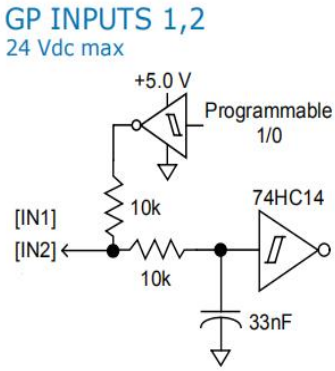

Figure 3.4.1 IN 1-in 2 Hardware input circuit

IN1 and IN 2 are universal input signal terminals. The control logic and function can be set by software. IN 1 is used for driver enablement control, which takes effect by setting high/low level by software parameter.

3.5 High speed input signal terminal (IN3, IN4, IN5, IN6)

IN 3, IN4, IN 5, IN 6 are high-speed input terminals, which can be used as general general terminals as well as high-speed pulse input. The pulse input port is fixed

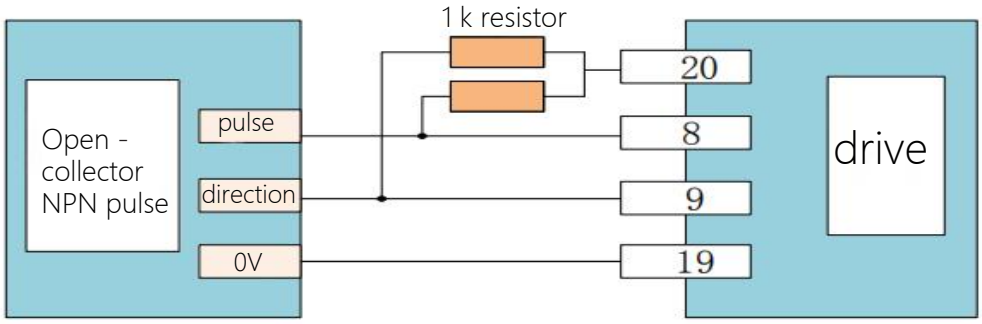

Figure 3.5.1 Open-collector NPN pulse input diagram

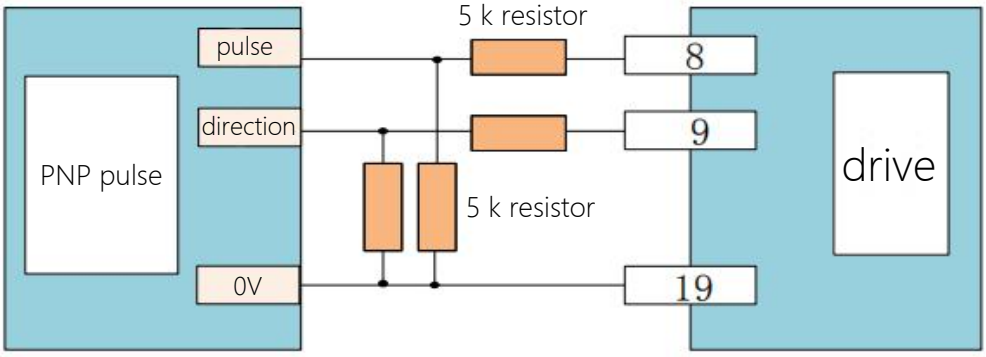

Figure 3.5.2 PNP pulse input diagram

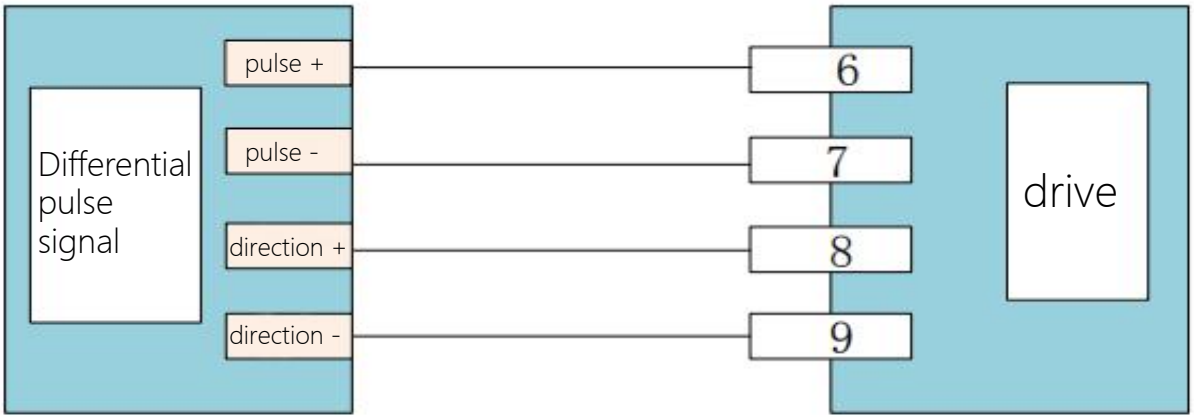

Figure 3.5.3 Differential pulse input diagram

3.5.1 Optical isolation digital input

There are altogether 4 inputs, which can be connected into NPN or PNP input signals according to different wiring, as shown in the following figure;

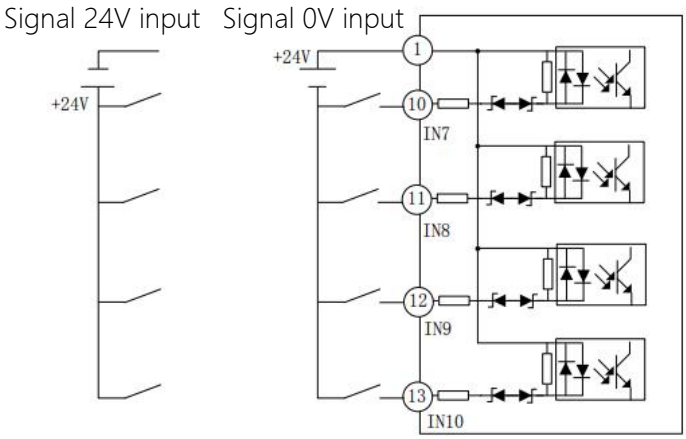

Figure 3.5.1 Optical isolation digital input

3.6Digital output signal

DE series drivers have 3 digital output, digital output IO port MOSFET open output, without diode series 1K resistance in the way of pulling up to 5V, port can withstand voltage to 24Vdc, the maximum current can withstand 300mAdc, port output function can be changed according to internal programming.

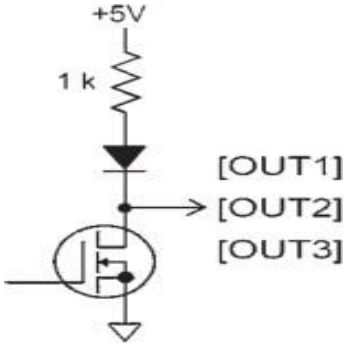

Figure 3.6.1 Digital output hardware Circuit (OUT1~3)

3.6.2 Motor lock output

The digital output ports OUT1, OUT2 and OUT3 can all be set as motor lock brake control. In the case of no fault and motor enabling, the brake is energized and the brake is released. In the case of any fault, the brake power is quickly disconnected to stop the motor. Because the motor brake is a perceptual device, the reverse current return diode must be paralleled.

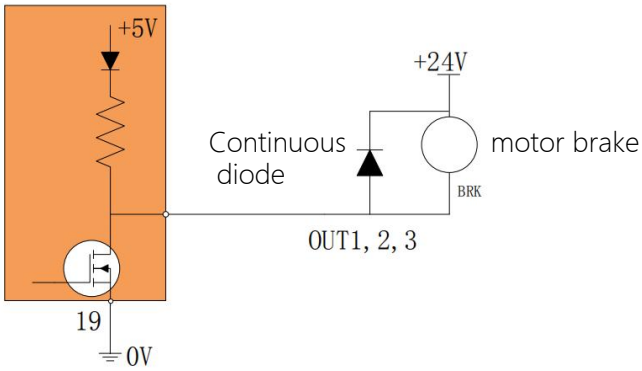

Figure 3.6.2 External circuit of motor brake

3.7 PWM signal input

The motor can be controlled by PWM signal for speed and torque, including single-end PWM duty ratio + direction signal and single-end PWM duty ratio ±50% modulation.

3.7.1 Single PWM duty cycle =0~100% pulse control

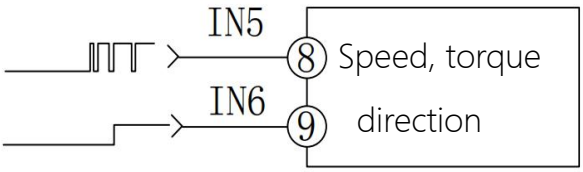

Figure 3.7.1 100% duty cycle + direction control

3.7.2 Single-end PWM duty cycle =50%±50% pulse control

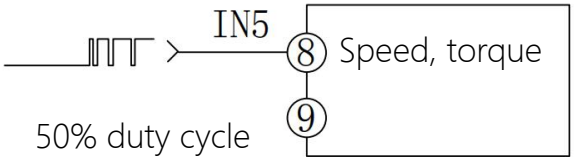

FIG. 3.7.2 50%±50% duty cycle control

3.8 Second encoder wiring

The DE driver has a second encoder input function, which can be used as a full closed-loop function, or as a motor encoder signal output, which can be configured in software.

3.8.1 Cables to the full-duplex absolute encoder

Supported protocols include SSI, BiSS

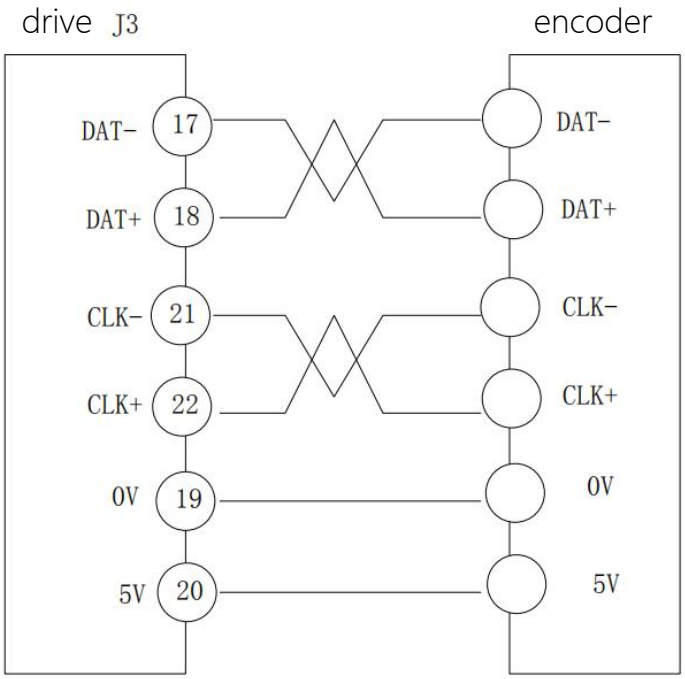

3.8.2 Half duplex absolute value coding cable

Supported protocols are absolute-A, Panasonic Absolute-A, Sanyo Absolute-A, and Tama Kawa Absolute-A.

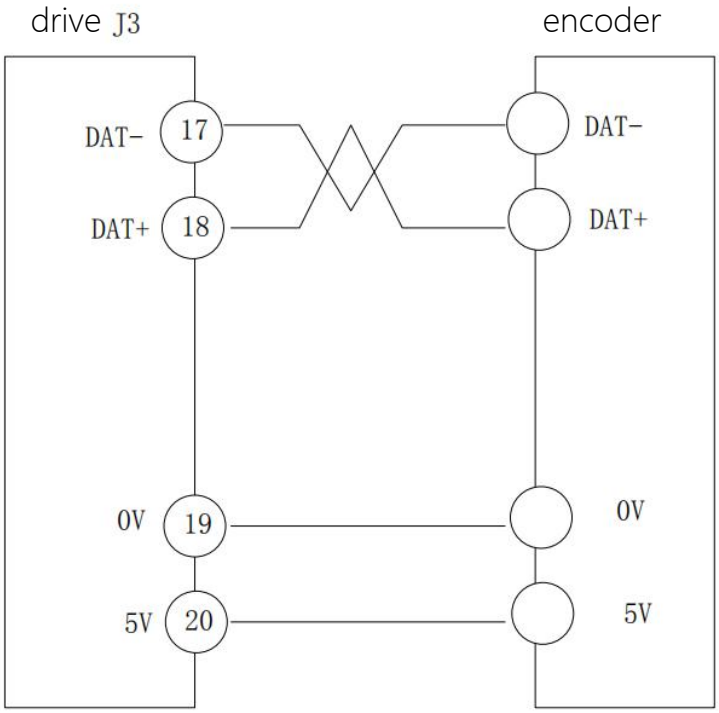

4 Motor connection

1. Incremental encoder wiring

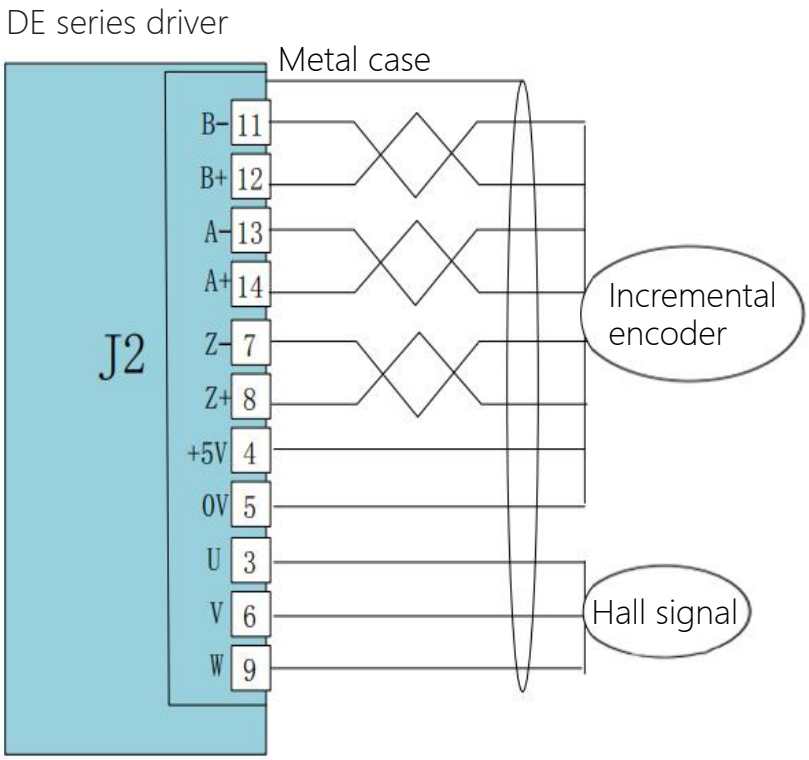

4.3 Absolute encoder wiring

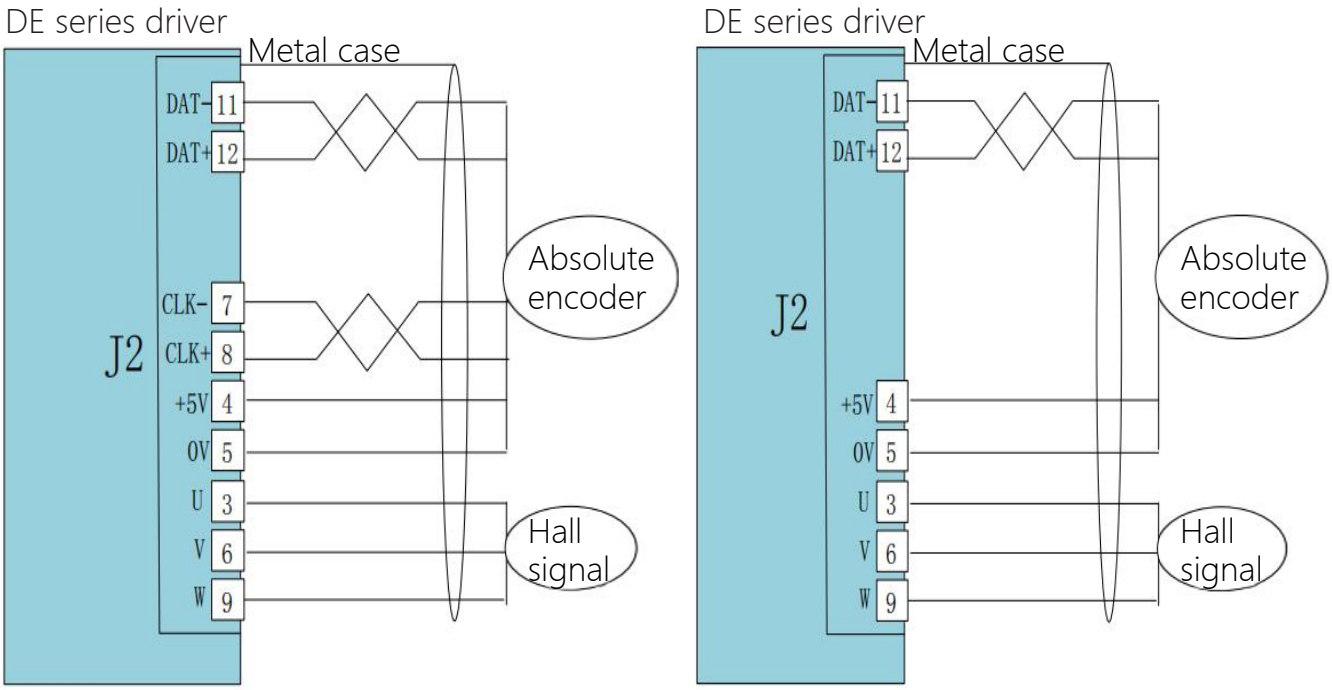

A B

5 Drive parameter Setting

DE series drivers can set parameters, monitor motor status, collect data waveform and so on through RS232 serial port. Complete system debugging quickly and intuitively. For details, see the debugging software instructions.

6、 System wiring diagram

6.1 Typical wiring diagram

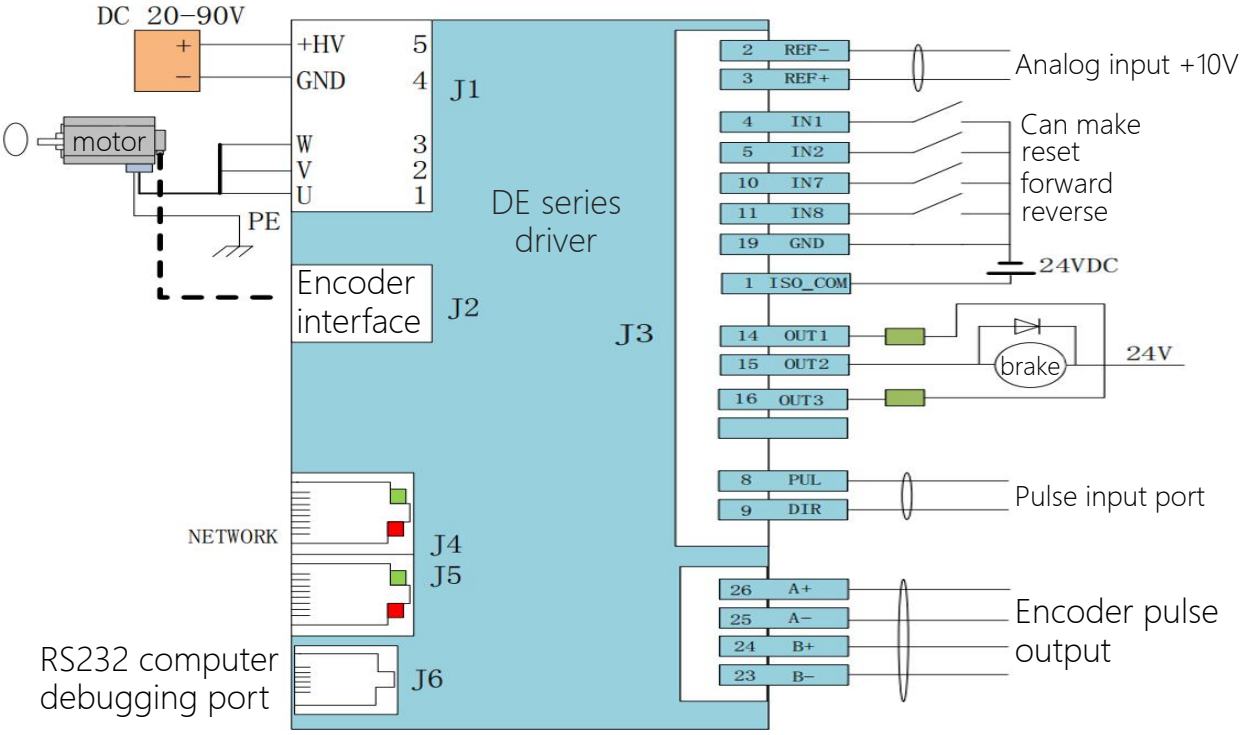

Contact Us

Shenzhen ONKE Technology Co.

Tel：0755-27387873 27381841

Email：onke@sz-onk.com

Address：Block 13, Huaide Cuihu Industrial Park, Fuhai Street, Baoan District, China

Revision record

Date	Version number	Revised content	
		Modify location	Modify content
20241210	V0.1	/	New edition