DE2 series servo driver instruction manual

Shenzhen ONKE Technology Co., LTD

DE2 Series servo driver model description

DE2 PC -090 16 -OP E A

A series of
DC/DE/DE2

Input order
P:pulse A:analog
C:CANopen E:EtherCAT

power supply voltage
090:18V-90VDC 180:18V-180VDC
135:18V-135VDC

Rated current
16:16Amps(11Arms) 24:24Amps(16Arms)
50:50Amps(35Arms)

Special function
OP:Pulse output

feedback
E:Incremental A/B orthogonal encoder
S:Analog quantity sine and cosine encoder

feedback
A:Absolute encoder

Attention to:
1.The driver supply voltage must be greater than or equal to the rated voltage of the motor

2.The rated current of the driver must be greater than or equal to the rated current of the motor

DE2 Series driver specifications summary table

Driver model	service voltage	Rated current Amps(Arms)	Peak current Amps(Arms)6S	Feedback type	Overalldimensions	weight
DE2PC-09003-OPEA	18～90 VDC	3A（2.1A）	6A（4.2A）	incremental | absolute value	208*118*40mm	0.7kg
DE2PC-09005-OPEA		5A（3.5A）	10A（7A）			
DE2PC-09010-OPEA		10A（7A）	25A（17A）			
DE2PC-09016-OPEA		16A（11A）	48A（33A）			
DE2PC-09024-OPEA		24A（16A）	50A（35A）			
DE2PC-09040-OPEA		40A（28A）	80A（56A）			
DE2PC-09050-OPEA		50A（35A）	100A（70A）			
DE2PC-09075-OPEA		75A（52A）	150A（105A）		245*148*59mm	1.65kg
DE2PC-090100-OPEA		100A（70A）	200A（140A）			
DE2PC-090150-OPEA		150A（105A）	250A（175A）			
DE2PC-18024-OPEA	18～135 /180 VDC	24A（16A）	50A（35A）		208*118*40mm	0.7kg
DE2PC-18050-OPEA		50A（35A）	100A（70A）		245*148*59mm	1.65kg
DE2PC-18075-OPEA		75A（52A）	150A（105A）			
DE2PC-135100-OPEA		100A（70A）	200A（140A）			

DE2 Serial terminal Definition

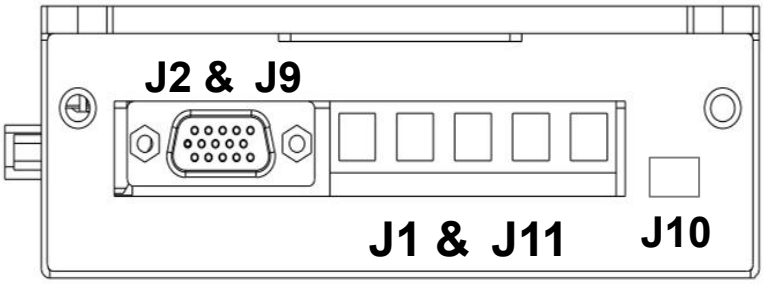

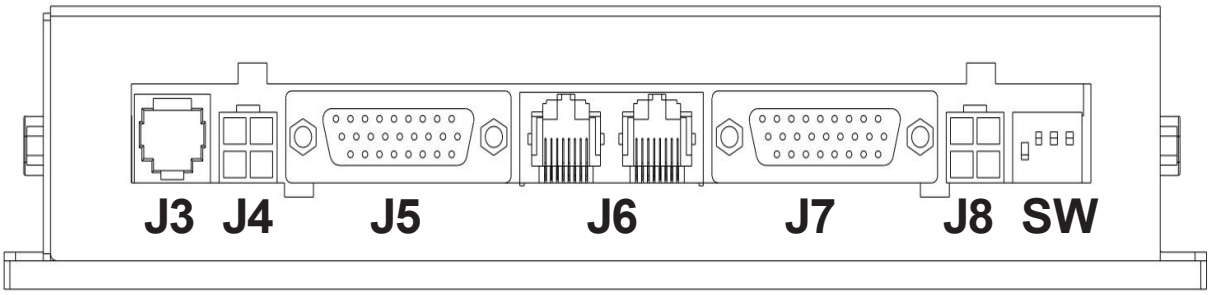

DE2 Series outline dimension drawing

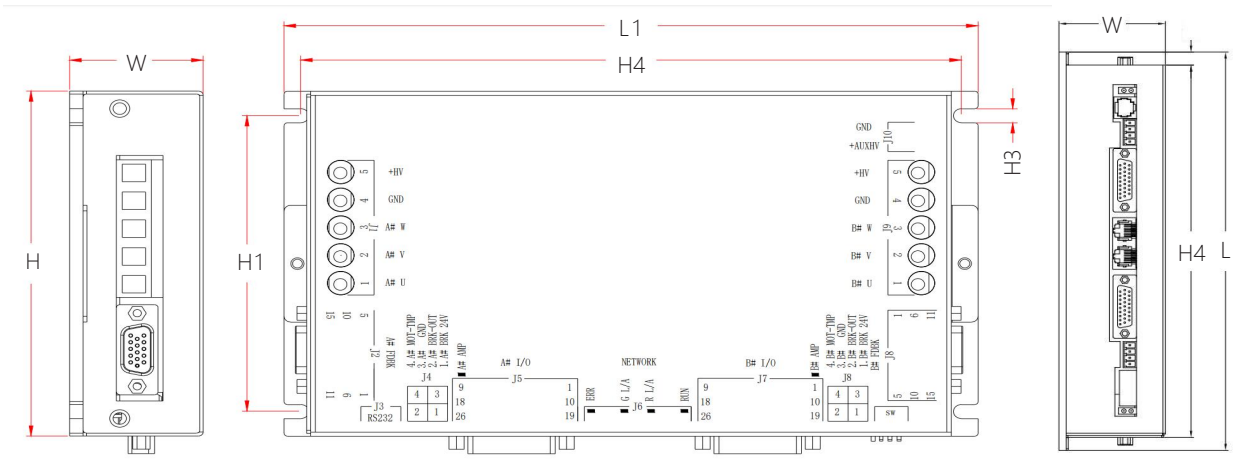

model	L	L1	W	H	H1	H2	H3	H4
DE2PC-09003A~50A	208	198	40	118	101	/	4-4.8	192
DE2PC-09075A~150A	245	235	59	148	80	34.5	4-5.0	229
DE2PC-18024A	208	198	40	118	101	/	4-4.8	192
DE2PC-18050A~75A	245	235	59	148	80	34.5	4-5.0	229
DE2PC-135100A								

1、Product Introduction:

1.1 An overview of the

DE2 series programmable intelligent servo driver is a universal, high performance, DC power supply, compact structure of all digital servo dual drive controller. It is mainly used for position, speed and torque control of linear (DDL), torque (DDR), voice coil, brushless and brushless servo motor. It can operate in three modes, namely, stand-alone, external, or distributed network control. It supports incremental encoders, analog sine and cosine encoders, rotary transformers, digital Hall feedback, and absolute encoders. The multimode encoder port is used as input or output depending on the basic setup of the drive. Feedback from the secondary encoder as input to create a double-loop position control system.

1.2 Technical characteristics

◆•Control mode: position, speed, torque；

◆•Sampling frequency (time) Current loop: 16KHz(62.5us); Speed/Position Loop :4KHz(250μs)；

◆•Bandwidth: the current loop is generally 2.5kHz, which varies with parameter adjustment and load inductance；

◆•Programmable protection: position error, over current, over voltage or under voltage, I^2t, output short circuit overload and other multi-directional protection functions；

◆•Driving motor type: brushless motor, brush motor, linear motor, voice coil motor, etc；

◆•Encoder feedback: incremental encoder, Hall, grating scale, analog sine and cosine (Sin/Cos) encoder, rotary transformer (plus conversion card), Absolute encoder, support SSI, Absolute A, BiSS(B&C) protocol；

◆•Pulse response frequency up to 2MHz, with digital filtering function；

◆•RS232 serial interface, baud rate up to 115KB；

◆•CAN2.0 local area bus, compatible with CANopen DS-402, baud rate up to 1MHz; Support PVT, back to zero, interpolation；

◆•EtherCAT Ethernet Fieldbus, used as EtherCAT slave using CANopen application protocol, supports cyclic synchronous position-speed-Torque (CSP-CSV-CST),PVT, interpolation, and zero back for DSP-402 motion control devices with EtherCAT(CoE) protocol；

◆•Power supply voltage: 20-90(135/180)VDC；

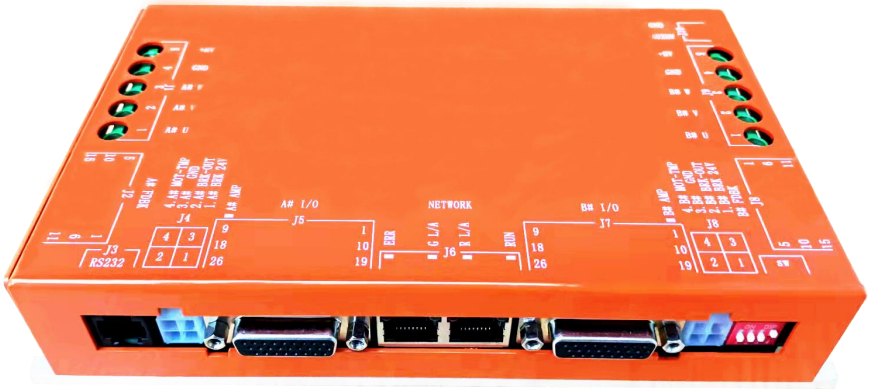

1.3 Standard specifications for servo drives

Position control	Command control mode			Pulse, ±10V analog input, CANopen (EtherCAT), function generator, track index, software programming
	Input signal	Pulse instruction	Input pulse pattern	The command can be direction + pulse, ORTHOGONAL pulse of A and B phases, and CW/CCW pulse.
			Signal format	Collector open circuit
			Maximum pulse frequency	Biggest 2 MPPS
		Simulation instruction	Voltage range	Input voltage range ±10V
			Input impedance	Differential input impedance =5KΩ
Speed control	Command control mode			PWM, ±10V analog, function generator, software programming
	Input signal	PWM	Polarity	PWM=0 ~ 100%, polarity =1/0
			Nonpolar	PWM=50% +/-50%,
			Frequency range	Minimum 1 kHz, maximum 100 kHz
			Minimum pulse width	220ns
		Simulation instruction	Voltage range	Input voltage range ±10V
			Input impedance	Differential input impedance =5KΩ
Current control	Command control mode			PWM, ±10V analog, function generator, software programming
	Input signal	PWM	Polarity	PWM=0 ~ 100%, polarity =1/0
			Nonpolar	PWM=50% +/-50%,
			Frequency range	Minimum 1 kHz, maximum 100 kHz
			Minimum pulse width	220ns
		Simulation instruction	Voltage range	Input voltage range ±10V
			Input impedance	Differential input impedance =5KΩ
I/O signal	Digital input IN		Port number	16 (IN3, IN4, IN11 and IN12 are high-speed ports)
			Signal format	NPN, PNP
			Settable function	Servo enable, external reset, positive/reverse limit, motor stop, high speed analog acquisition control, PWM synchronous signal input, high speed pulse input, etc.
	Digital output OUT		Port number	Six
			Signal format	Optocoupler output,maximum voltage 30Vdc.Two special motor lock output
			Settable function	Fault signal, brake control, PWM sync signal, custom event, track state, position trigger, program control.
Function	LED indicator			State indicator, CAN (EtherCAT) network indicator
	Communications functions	RS-232	Baud rate	9600-115200
			Agreement	Full duplex mode, ASCII or binary format
		CAN	Baud rate	20kbit/s-1Mbit/s
			Agreement	Canopen application layer DS-301 V4.02
			Equipment	Dsp-402 device driver and motion control
		EtherCAT	Agreement	CoE, CiA-402
	Protection function			Overvoltage, overcurrent, undervoltage, overload, overheating, abnormalencoder, position tracking error is too large and so on
Using environment	Installation location			Non-corrosive gas, flammable gas, etc
	Altitude			Below 1000 m
	Temperature			-20°C~+50°C
	Humidity			5%~95%RH, no condensation of water droplets
	Resistance to vibration/impact			Less than 4.9m/s2 / less than 19.6m/s2

2、Definition of wiring port

2.1 Power input terminals J1&J11

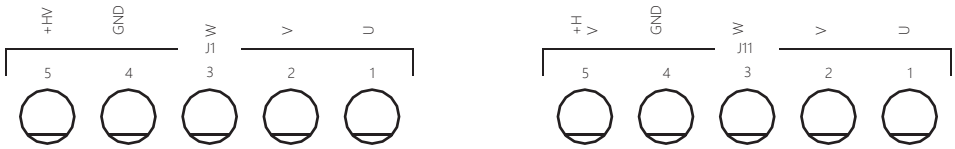

Figure 2.1 Ohm gauge terminal receptacle

J1

serial number	define	terminal	Wiring instructions
1	A#U	Motor power line U phase	Must be connected to the motor one by one according to label
2	A#V	Motor power line V phase	
3	A#W	Motor power line W phase	
4	GND	Input power -	+20~90V DC
5	+HV	Input power +	

J11

serial number	define	terminal	Wiring instructions
1	B#U	Motor power line U phase	Must be connected to the motor one by one according to label
2	B#V	Motor power line V phase	
3	B#W	Motor power line W phase	
4	GND	Input power -	+20~90V DC
5	+HV	Input power +	

2.2 Motor encoder input terminal J2 & J9

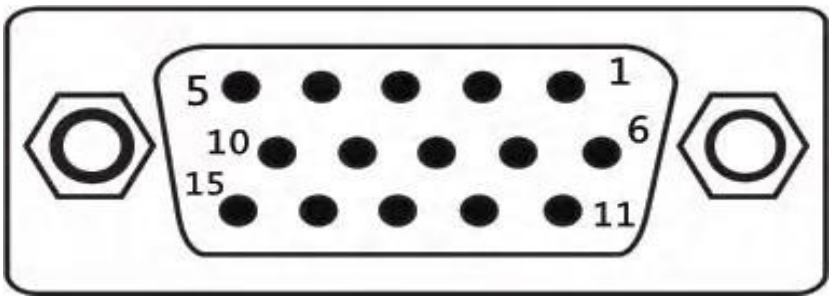

Figure 3.2 Three rows of DB15 female seats

J2 A axis encoder definition

Pin	Define	Function	Pin	Define	Function
1	SIN+	SIN+	9	W+	Motor encoder W+ input
2	SIN-	SIN-	10	COS+	COS+
3	U+	Motor encoder U+ input	11	B-(DAT-)	Motor encoder B- input (Absolute value coder DAT-)
4	+5V	Motor signal line +5V	12	B+(DAT+)	Motor encoder B+ input (Absolute encoder DAT+)
5	0V	Motor signal cable GND	13	A-	Motor encoder A- input
6	V+	Motor encoder V+ input	14	A+	Motor encoder A+ input
7	Z- (CLK-/MA-)	Motor encoder Z- input (Absolute value CLK-/MA-)	15	COS-	COS-
8	Z+ (CLK+/MA+)	Motor encoder Z+ input (Absolute value CLK+/MA+)			

J9 B axis encoder definition

Pin	Define	Function	Pin	Define	Function
1	SIN+	SIN+	9	W+	Motor encoder W+ input
2	SIN-	SIN-	10	COS+	COS+
3	U+	Motor encoder U+ input	11	B-(DAT-)	Motor encoder B- input (Absolute value coder DAT-)
4	+5V	Motor signal line +5V	12	B+(DAT+)	Motor encoder B+ input (Absolute encoder DAT+)
5	0V	Motor signal cable GND	13	A-	Motor encoder A- input
6	V+	Motor encoder V+ input	14	A+	Motor encoder A+ input
7	Z- (CLK-/MA-)	Motor encoder Z- input (Absolute value CLK-/MA-)	15	COS-	COS-
8	Z+ (CLK+/MA+)	Motor encoder Z+ input (Absolute value CLK+/MA+)			

2.3 Control signal I/O terminals J5 & J7

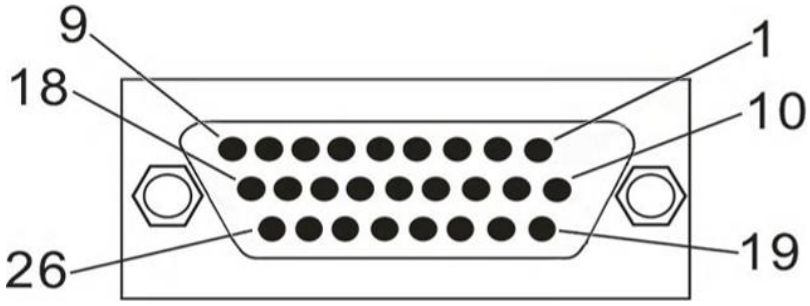

Figure 3.3 Three rows of DB26 female seats

J5 Axis IO

Pin	Define	Function	Pin	Define	Function
1	FG	grounding	14	ISO_OUT1-	custom
2	A#Ref-	Analog quantity - input	15	ISO_OUT2+	custom
3	A#Ref+	Analog quantity + input	16	ISO_OUT2-	custom
4	IN1	custom	17		
5	IN2	custom	18		
6	IN3	custom	19	GND	Power grounding
7	IN4	custom	20	+5V	5V power output (100mA)
8	ISO_IN5	custom	21	A#EONZ-	Motor encoder output signal Z-
9	ISO_IN6	custom	22	A#EONZ+	Motor encoder output signal Z+
10	ISO_IN7	custom	23	A#EONB-	Motor encoder output signal B-
11	ISO_IN8	custom	24	A#EONB+	Motor encoder output signal B+
12	A#ISO_COM	Common end of ISO terminal	25	A#EONA-	Motor encoder output signal A-
13	ISO_OUT1+	custom	26	A#EONA+	Motor encoder output signal A+

J7 Axis IO

Pin	Define	Function	Pin	Define	Function
1	FG	grounding	14	ISO_OUT3-	custom
2	B#Ref-	Analog quantity - input	15	ISO_OUT4+	custom
3	B#Ref+	Analog quantity + input	16	ISO_OUT4-	custom
4	IN10	custom	17		
5	IN11	custom	18		
6	IN12	custom	19	GND	Power grounding
7	IN13	custom	20	+5V	5V power output (100mA)
8	ISO_IN14	custom	21	B#EONZ-	Motor encoder output signal Z-
9	ISO_IN15	custom	22	B#EONZ+	Motor encoder output signal Z+
10	ISO_IN16	custom	23	B#EONB-	Motor encoder output signal B-
11	ISO_IN17	custom	24	B#EONB+	Motor encoder output signal B+
12	B#ISO_COM	Common end of ISO terminal	25	B#EONA-	Motor encoder output signal A-
13	ISO_OUT3+	custom	26	B#EONA+	Motor encoder output signal A+

2.4 J6CAN communication terminal

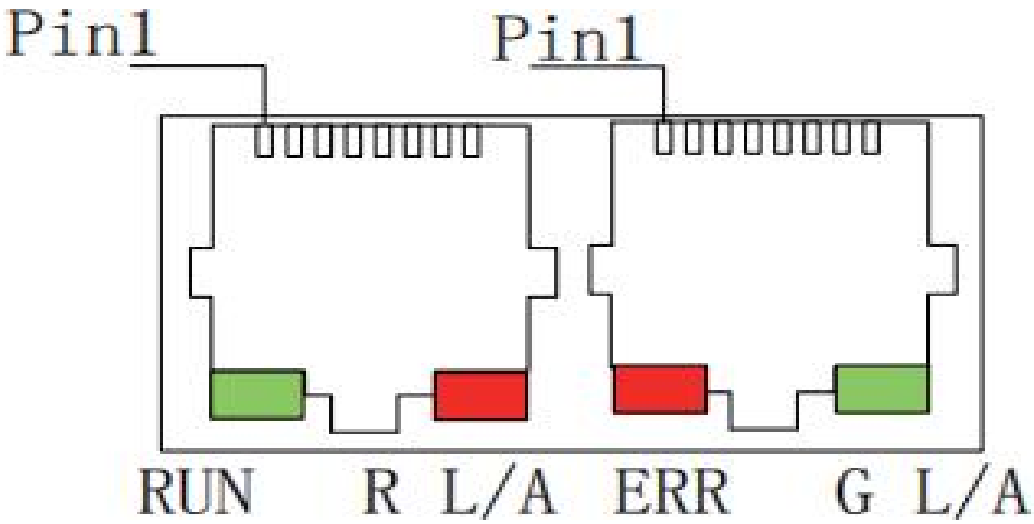

2.4.1 RJ45 pin definition

CAN is defined when communicating

pin	define	function
1	CANH	CANH signal
2	CANL	CANL signal
3/7	GND	Communication power ground

EtherCAT communications

When the driver is EtherCAT, the J6 port can accept standard Ethernet cable wiring

2.4.2 Communication indicator (CAN)

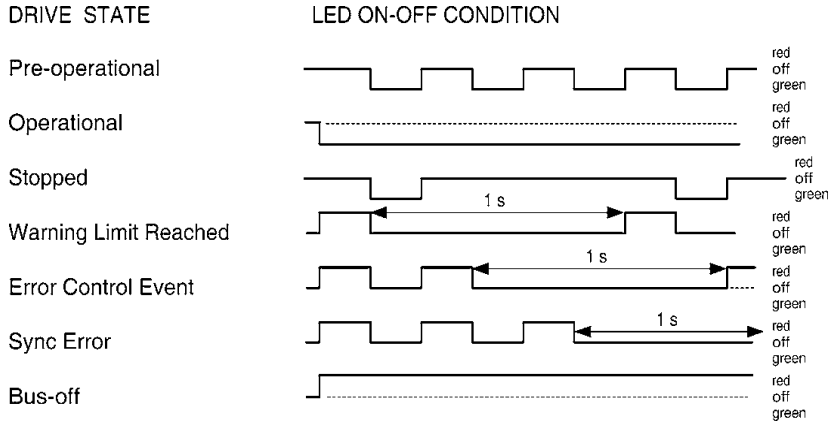

CAN communication:

Indicator light	state
L/A (Displays link status and link activity)	Off = No connection
	On = The port is open and inactive
	On and blinking = The port is open and active
RUN (Display CAN communication status)	Off = Initialization
	Blinking = Before operation
	Blinking once = Stopped
	Steady on = Running
ERR(display communication erro	Off = no error and the communication is normal
	Blinking = Invalid configuration
	One blink = number of warning arrivals
	Blink twice = A protection event or heartbeat event occurs
	Steady on = The CAN controller bus is off

EtherCAT communicates:

Indicator light	state
L/A (Displays link status and link activity)	Off = The port is closed
	On = The port is open and inactive
	On and blinking = The port is open and active
RUN (Display EtherCAT communication status)	Off = Initialization
	Blinking = Before operation
	Single blinking = Safe operation
	Steady on = Running
ERR(display communication error)	Off = no error and the communication is normal
	Blinking = Invalid configuration
	One flicker = local error
	Two flashes =PDO or EtherCAT watchdog timed out
	Steady on = An error is displayed

2.4.3 SW Driver CAN address DIP switch

When the external DIP switch is selected for software Settings, the dip switch is effective. Dial is valid for the A-axis driver, the B-axis CAN address is the A-axis address plus 1. The switch encoding is in the BCD code sequence, and takes effect when the dip switch is switched to ON.

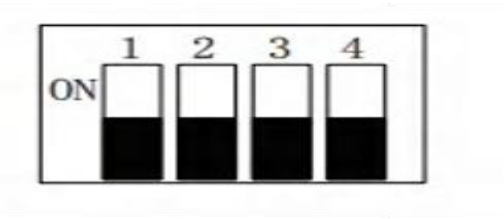

SW Indicates the station number of the DIP switch

SW switch Number	Corresponding stand no.
1	8
2	4
3	2
4	1

For example, to set the station number to 3, dial SW switch 4 and 3 to ON, 1+2=3; If you want to set the station number to 10, switch SW switch 1, 3 to ON, 8+2=10

2.5 Serial communication terminal J3

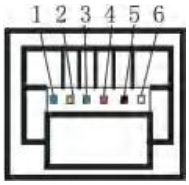

Figure 3.4 RJ11 6 pin crystal head holder

pin	define	function
2	RXD	RS232 communication receiver
3	GND	Communication power ground
5	TXD	RS232 communication sender

debugging connection line is shown below

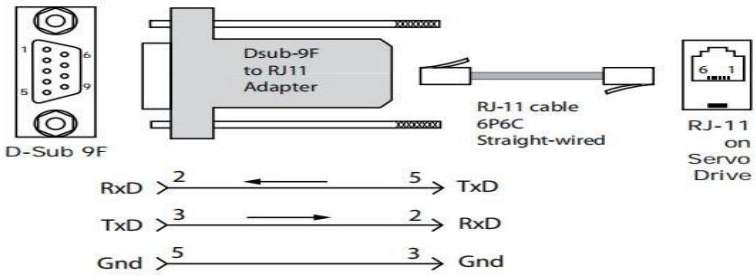

2.6 Auxiliary power supply J10

The driver of J10 socket is the auxiliary power interface, if necessary, it can be connected. If connected,+HV is disconnected from power and +AUXHV is powered on, but there is no action when issuing commands

GND	0V
+AUXHV	+24V(or ≤ mains voltage)

2.7 AMP LED

A#AMP and B#AMP are the status indicators for the two shafts of the drive. The possible states are as follows

Green/no flash	drive is OK and enabled
Green/Slow blinking	drive is OK but not enabled. After enabled, it can run
Green/Flash	Positive limit switch or negative limit switch is effective, the motor will only move in the direction not prohibited by the limit switch
Red/Fixed	Instantaneous failure, after troubleshooting amplifier restart operation
Red/flashing	Lock the fault and restart the amplifier to resume operation

2.8 J4(A#) and J8(B#) terminals can be enabled as the brake of the control motor or as the general output port

serial number	define	instructions
1	BRK-24	External 24 v
2	BRK-OUT	brake output
3	GND	External 0 v
4	MOT-TMP	Temperature switch connected to motor

3 Hardware Wiring

3.1.1 CAN bus (CANH, CANL, GND)

CAN bus is based on CAN V2.0B physical layer. The signals of CAN physical layer include CANH, CANL and GND, and communicate with CANopen protocol. Electrical interface uses TJA1051 high speed transceiver. The physical address of the drive CAN communication ranges from 0 to 127. The default address is 0. You can reset or restart the drive to take effect by changing the RS-232 communication port address or external switch SW. Through the CAN communication interface, a very effective combination of high data rate and low cost multi-axis motion control system CAN be realized.

CAN network CAN be connected as shown below：

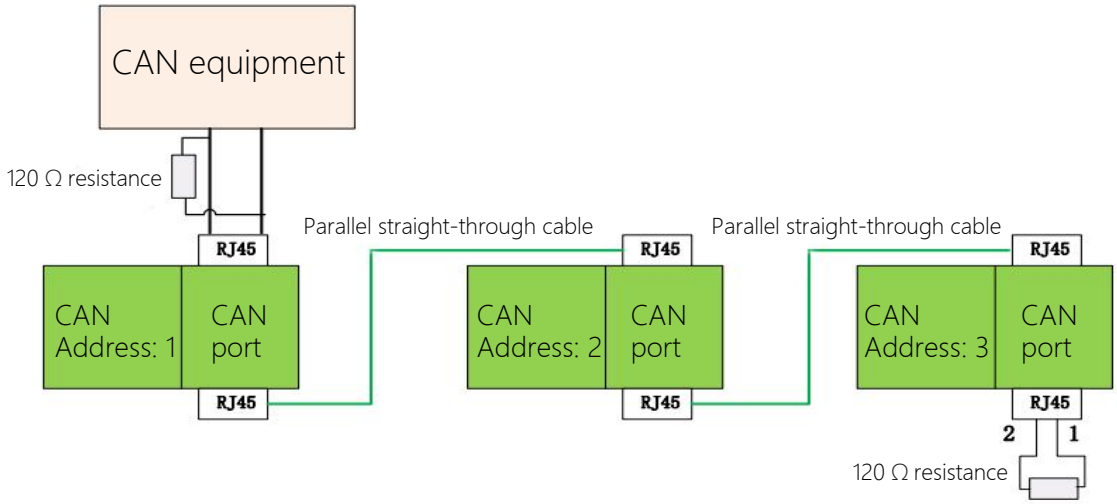

3.1.1 EtherCAT Ethernet bus

Just connect the drive with a standard Ethernet cable.

3.2 Analog signal input (Ref+,Ref-)

±10Vdc differential analog input, maximum input voltage ±10Vdc, input impedance about 5.36K, resolution 12 bits. The analog signal can be used for torque, speed and position control.

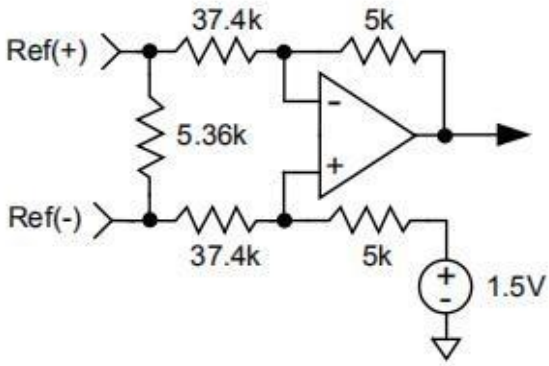

Figure 3.2.1 Analog hardware input circuit

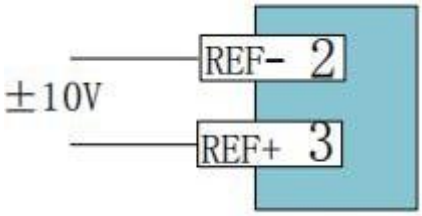

Figure 3.2.2 Analog input wiring of external power supply

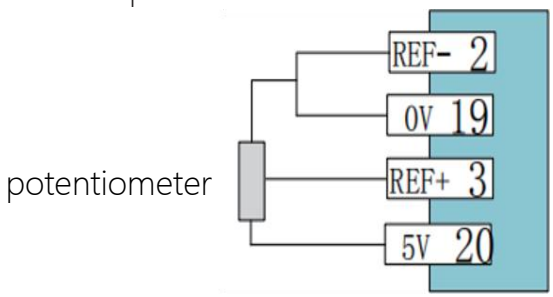

Figure 3.2.3 Analog input wiring of internal power supply

3.3 Digital input signal

DE2 series servo has 16 digital input ports,14 of which have programmable functions. The drive power PWM output and safety enable are controlled by IN1 and IN10. Through this port, the power circuit can be hardware cut off (off enable).

According to the port function of the controller and the RC filtering time of the hardware, the input signal port can be divided into general input port and high-speed input port, and the function of each port can be changed by programming.

3.4 General purpose input signal terminal

Level change table of input terminal

input	state	conditions
IN1,2,10,11	HI	VIN >=3.5 Vdc
	LO	VIN<=0.7 Vdc
IN3,4,12,13	HI	VIN >=2.7 Vdc
	LO	VIN<=2.3 Vdc
IN5,6,7,8 IN14,15,16,17	HI	VIN >=10.0 Vdc
	LO	VIN <=6 Vdc

Note: IN3,4,12 and 13 are high speed input ports, which can input high speed pulse.

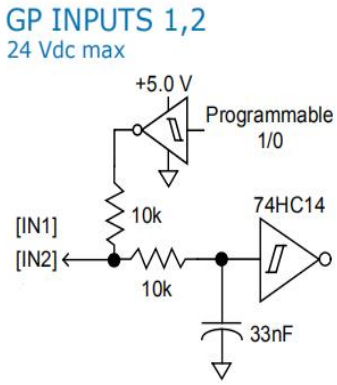

Figure 3.4.1 IN 1-in 2 Hardware input circuit

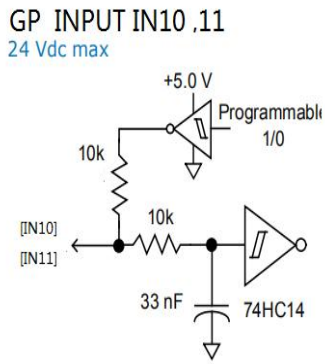

Figure 3.4.2 IN 10-IN11 hardware input circuit

IN1, IN 2, IN 10, and IN 11 are universal input signal terminals. The control logic and functions can be set by software. IN1,IN10 are fixed for driver enablement control, which takes effect by setting high/low level by software parameter.

3.5 High speed input signal terminal (IN3, IN4, IN12, IN13)

IN 3, IN4, IN 12, IN 13 are high-speed input terminals, which can be used as general terminals as well as high-speed pulse input. The pulse input port is fixed

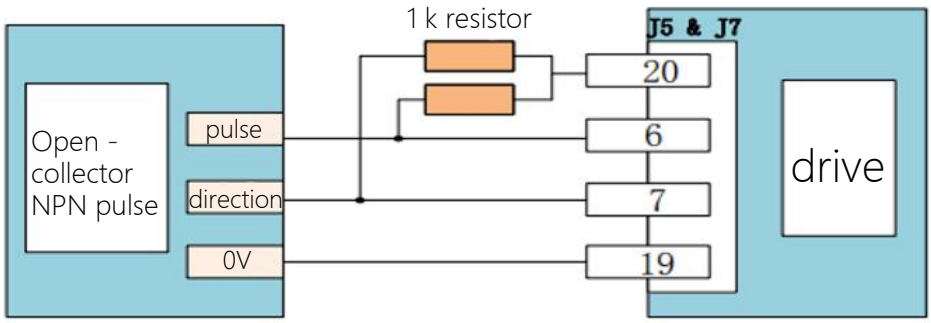

Figure 3.5.1 Open-collector NPN pulse input diagram

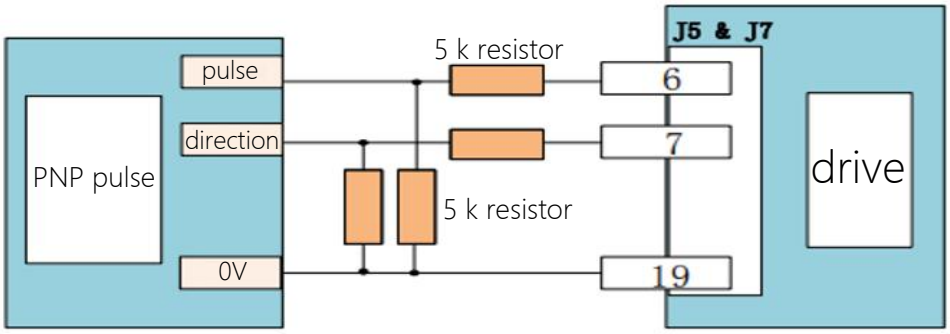

Figure 3.5.2 PNP pulse input diagram

3.5.1 Optical isolation digital input

There are a total of 8 inputs, four for each axis, which can be connected to NPN or PNP input signals according to different wiring, as shown below.

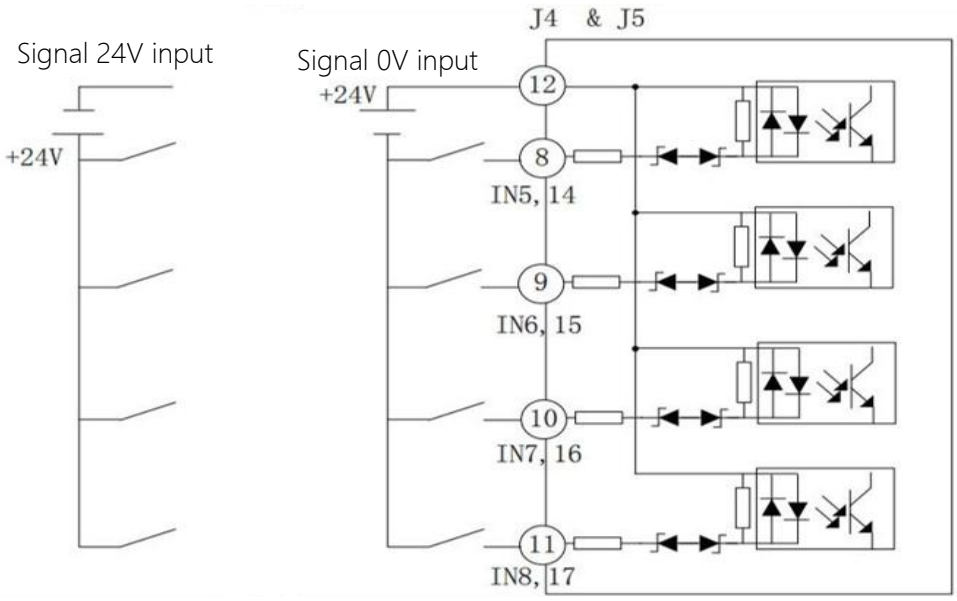

3.6 Digital output signal

3.6.1 Outputs OUT1,2,3, and 4 are photoelectric isolation outputs

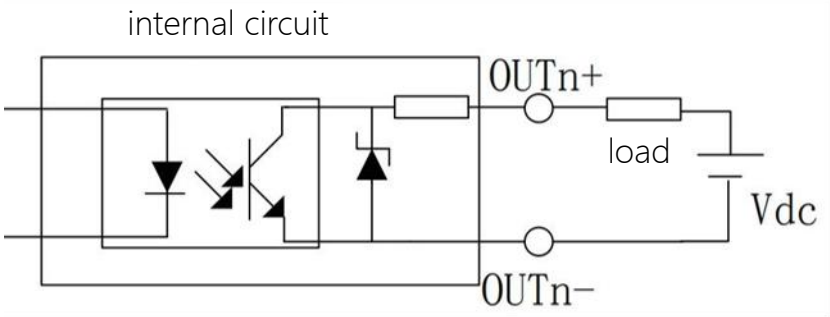

Figure 3.6.1 Digital Output Hardware Circuit (OUT1~4)

3.6.2 Motor lock output

The BRK terminal on J4 and J8 can directly control the motor brake, OUT6 is configured on the servo software,OUT7 is configured as the brake output control system, energize the brake and release the brake when there is no fault and the motor is enabled, and quickly disconnect the power supply of the actuator to stop the motor in case of any fault. Because the circuit has a continuation diode, so no external current diode.

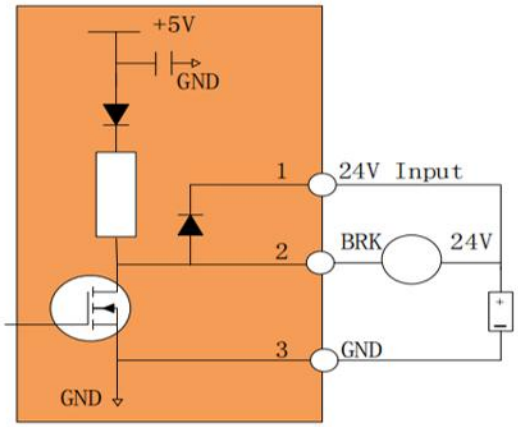

Figure 3.6.2 External circuit of motor brake

3.7 PWM signal input

The motor can be controlled by PWM signal for speed and torque, including single-end PWM duty ratio + direction signal and single-end PWM duty ratio ±50% modulation.

3.7.1 Single-end PWM duty cycle =0~100% pulse control

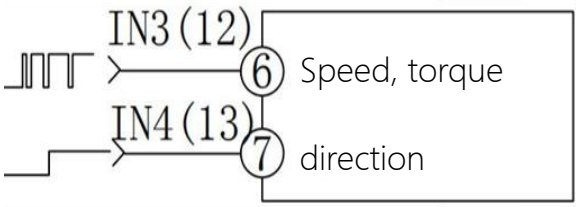

Figure 3.7.1 100% duty cycle + direction control

3.7.2 Single-end PWM duty cycle =0~100% pulse control

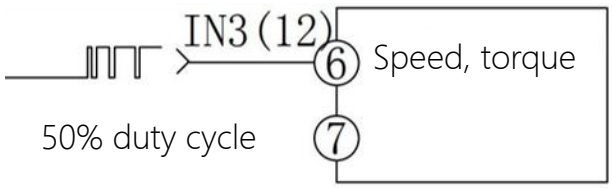

FIG. 3.7.2 50%±50% duty cycle control

3.8 Second encoder wiring

The DE2 driver has a second encoder input function, which can be used as a full closed-loop function, or as a motor encoder signal output, which can be configured in software.

3.8.1 Full duplex absolute encoder wiring supports SSI, BiSS protocols

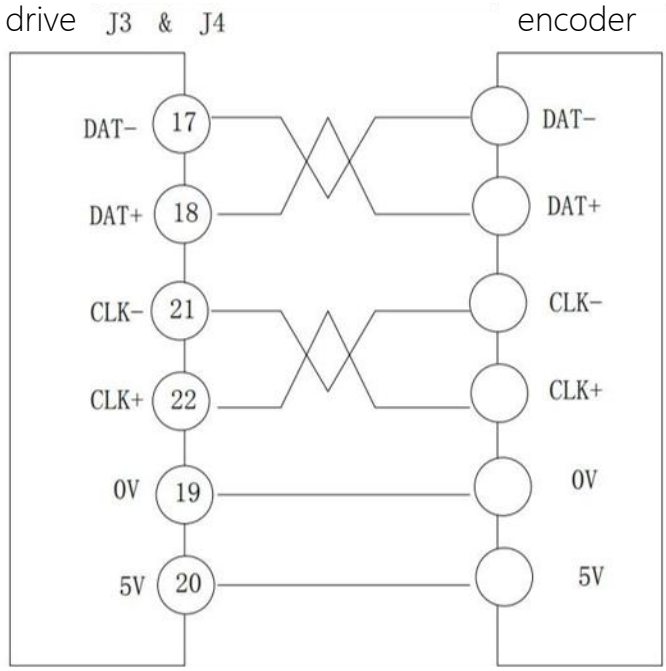

3.8.2 Half duplex absolute value coding cable

Supported protocols are absolute-A, Panasonic Absolute-A, Sanyo Absolute-A, and Tama Kawa Absolute-A.

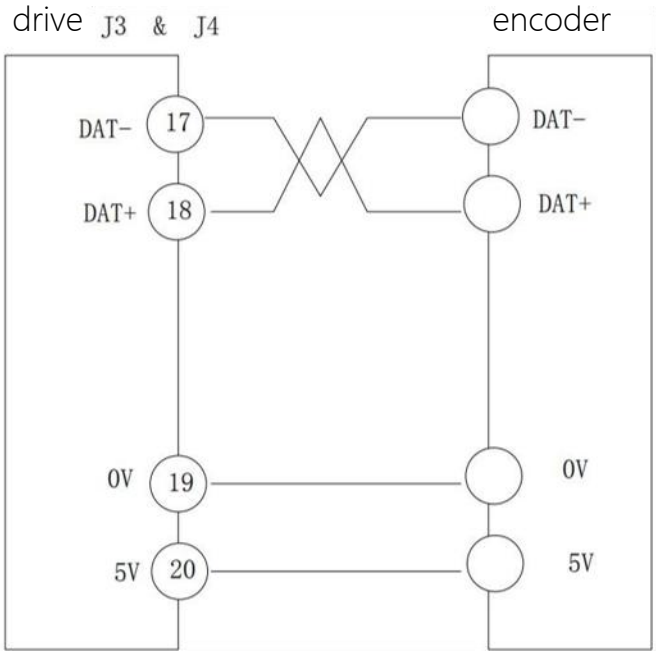

3.8.3 Incremental encoder wiring

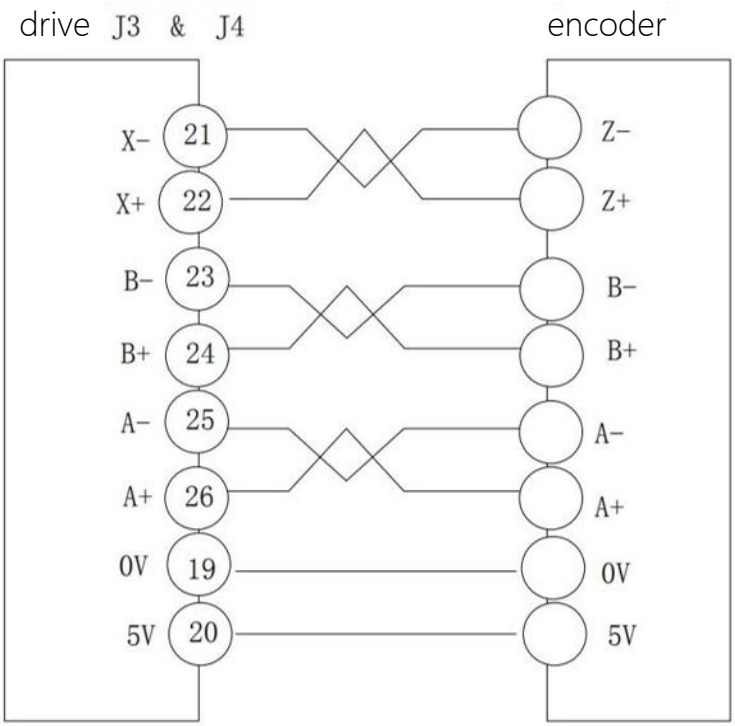

4 Motor connection

1. Incremental encoder wiring

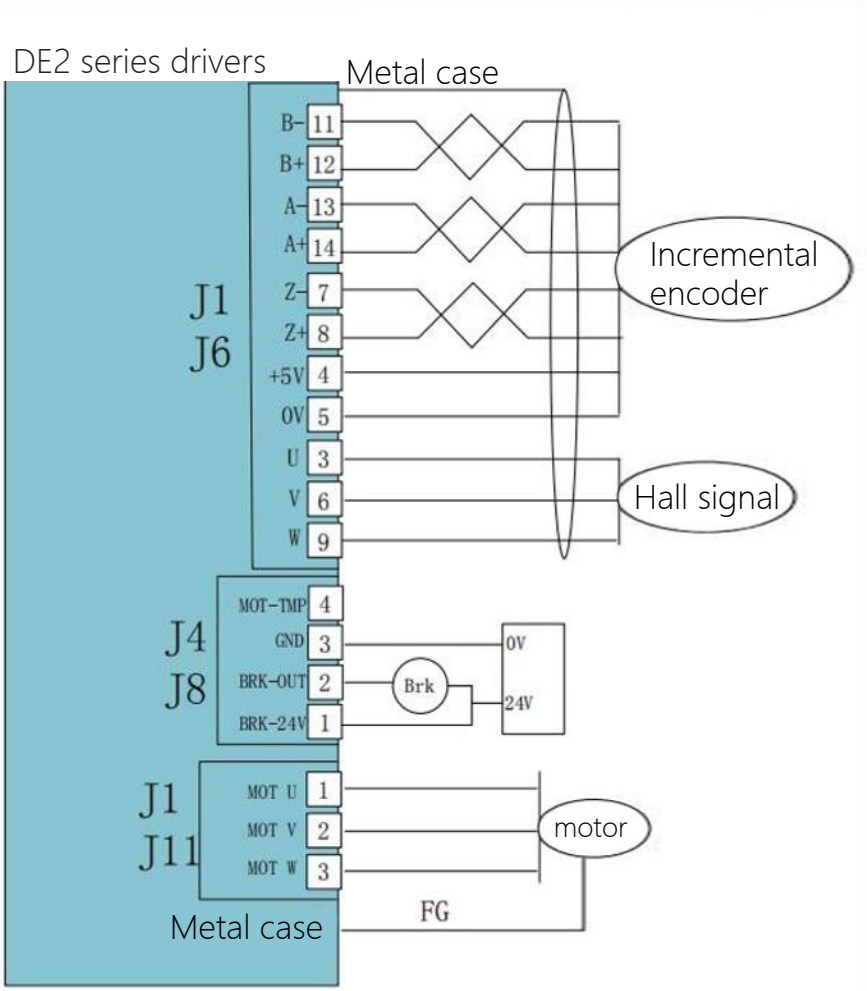

4.2 Sine and cosine analog coding wiring

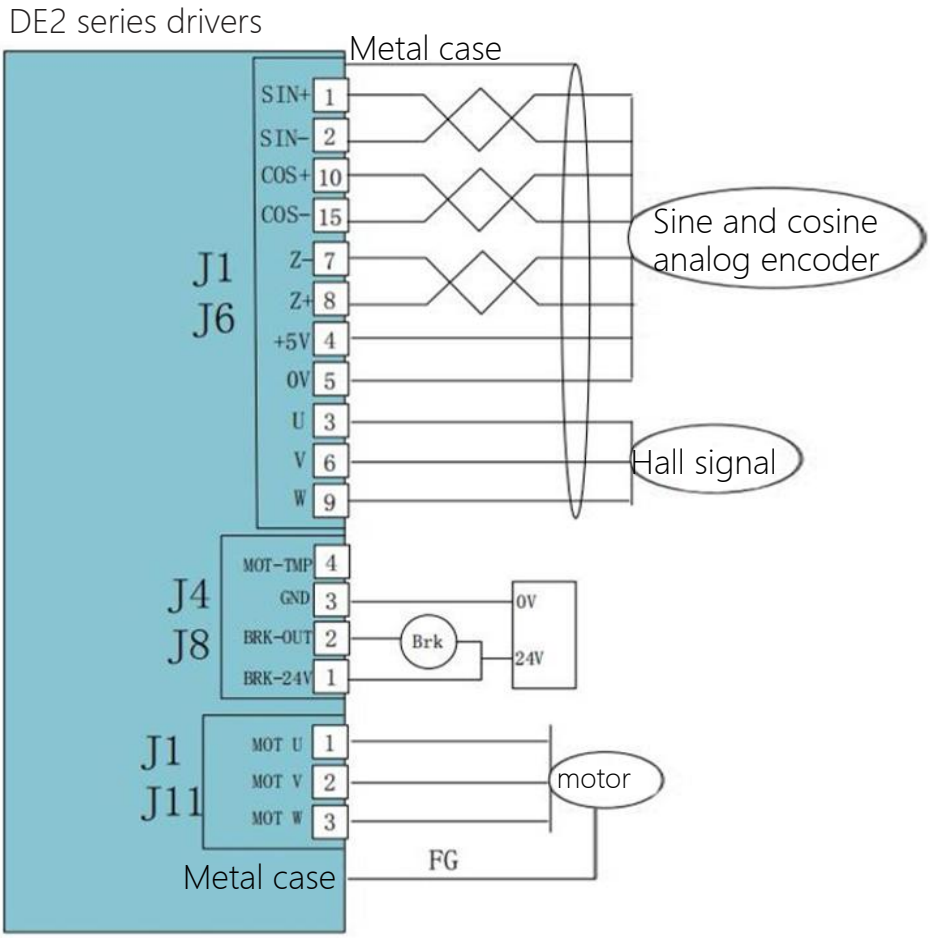

4.3 Absolute encoder wiring

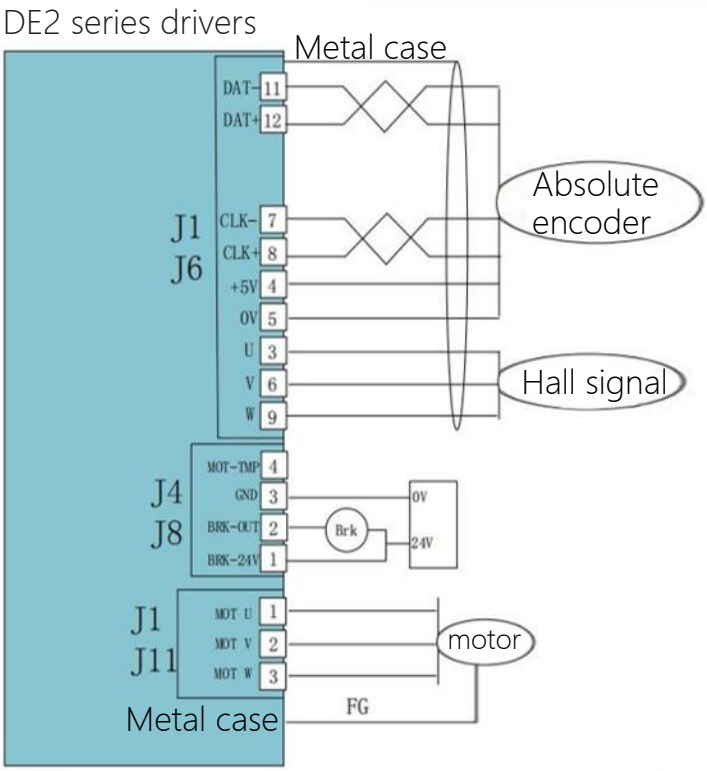

A

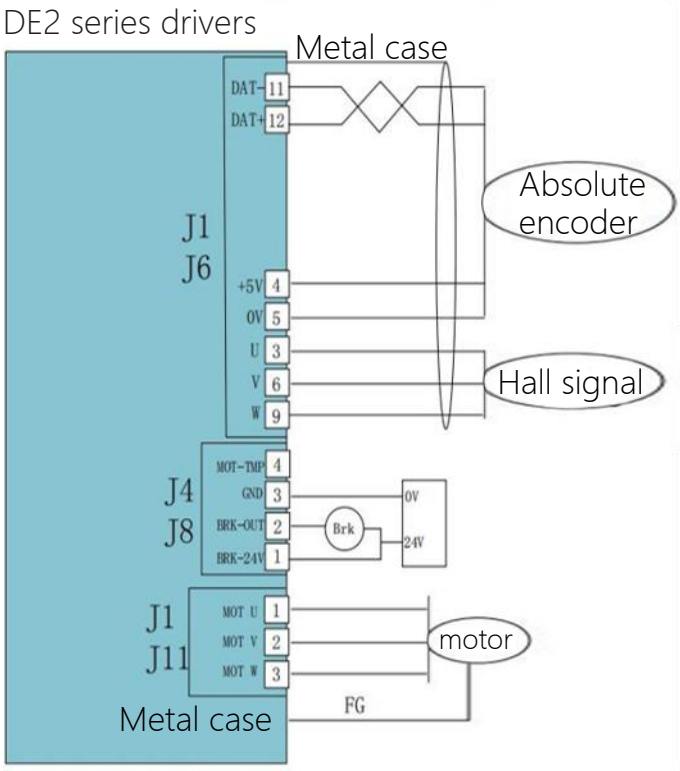

B

5 Drive parameter Setting

DE2 series drivers can set parameters, monitor motor status, collect data waveform and so on through RS232 serial port. Complete system debugging quickly and intuitively. For details, see the debugging software instructions.

6、 System wiring diagram

6.1 Typical wiring diagram

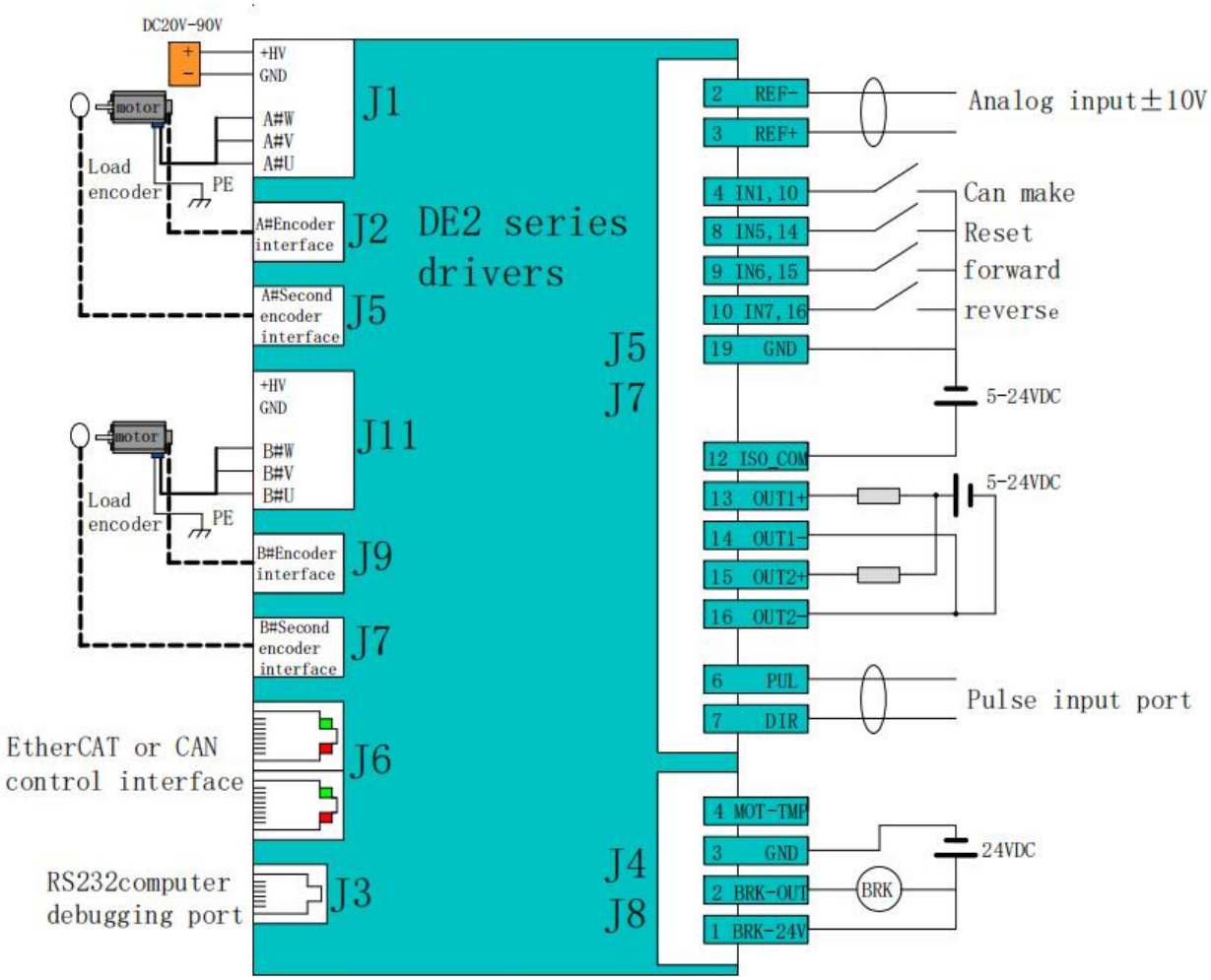

Contact Us

Shenzhen ONKE Technology Co.

Tel：0755-27387873 27381841

Email：onke@sz-onk.com

Address：Block 13, Huaide Cuihu Industrial Park, Fuhai Street, Baoan District, China

Revision record

Date	Version number	Revised content	
		Modify location	Modify content
20250106	V0.1	/	New edition